A & M Electric Tools

Ind	Product No.	Type	Voltage	Country
a	4000382638	PES12TOPTION	12V	***
d	4000382638	PES12TOPTION	12V	***

Battery Tools

Milwaukee

PES12T OPTION

Exp.view No.	Version	Date	Page
4926 3826 43	**0005**	**03.09.03**	**1/1**

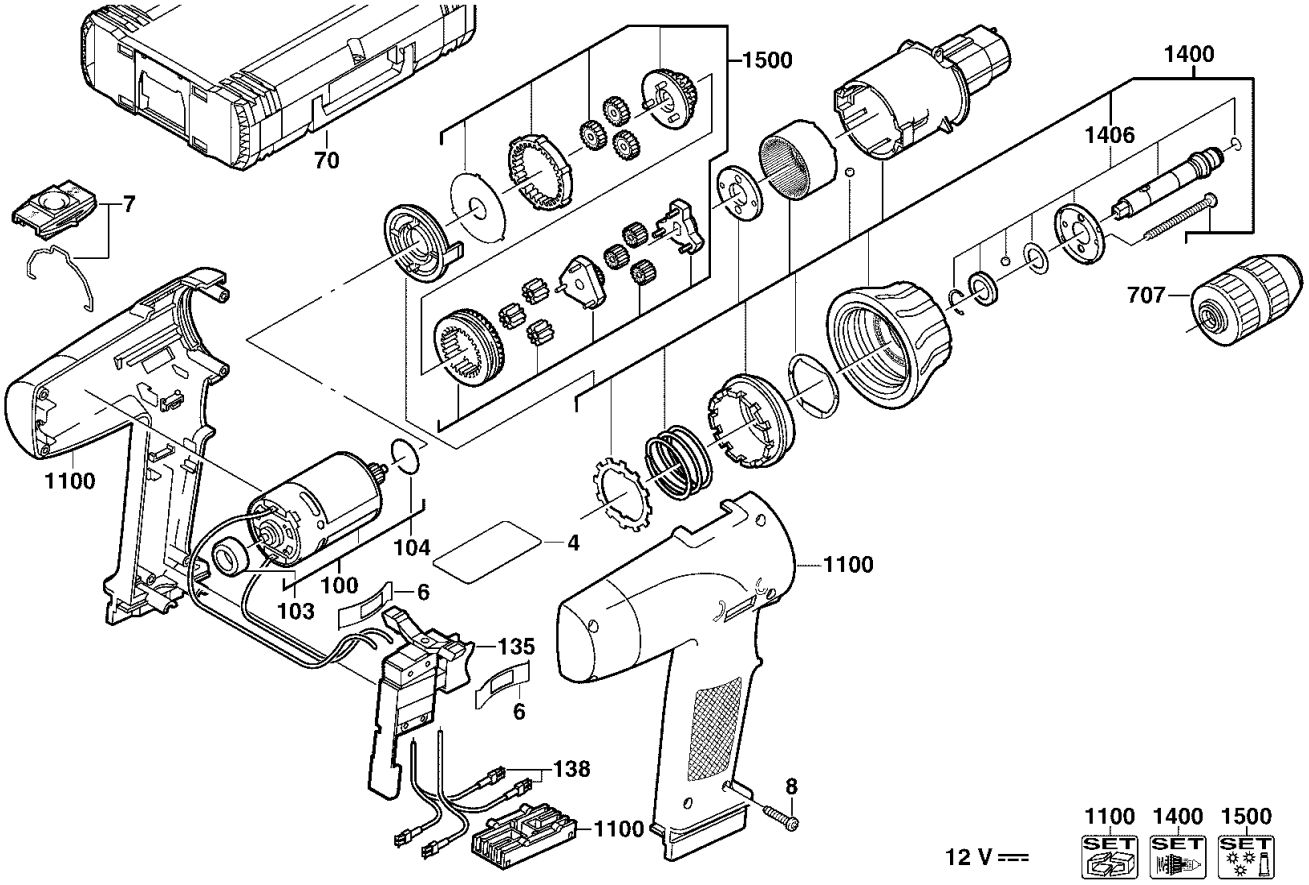

Pos	Index	Quanti	Article No.	Designation
0004	ad.....	1	4931382646	RATING PLATE
0006	ad.....	2	4931348216	PROTECTIVE CAP
0007	ad.....	1	4931359614	SLIDING SWITCH
0008	ad.....	6	4931622708	SCREW
0070	ad.....	1	4932378986	CARRYING CASE
0100	ad.....	1	4931356762	MOTOR
0103	ad.....	1	4931332388	RUBBER SLEEVE
0104	ad.....	1	4931622829	O-RING
0135	ad.....	1	4931359880	SWITCH
0138	ad.....	1	4931360955	CABLE SET
0707	a.....	1	4932376531	QUICK ACTION CHUCK
0707	.d.....	1	4932364613	KEYLESS CHUCK
1100	ad.....	1	4931386349	BODY
1400	ad.....	1	4931356742	GEAR HEAD
1406	ad.....	1	4931356740	SPINDLE
1500	ad.....	1	4931356744	GEAR BOX

Repairs/modification and and testing of electric power tools are to be carried out by specialists. The safety regulations according to DIN/VDE/CEE/AFNOR and other regulations valid in the different countries are to be observed.